FOR-1761 Rev.1.7

Reel Name	POLE	Width/W	Pitch/P	Width/F	Width/Bo	Qty. pre reel	Reel qty. per carton
15EDGRM-THR-3.81-DOUBLE POLE REEL(32)	2	32mm	12mm	14.25mm	18.41mm	470	8
15EDGRM-THR-3.81-SINGLE POLE REEL(56)	3、5、7、9	56mm	12mm	26.25mm	40.20mm	470	5
15EDGRM-THR-3.81-DOUBLE POLE REEL(56)	4、6、8	56mm	12mm	26.25mm	40.20mm	470	5
2EDGRM-THR-3.81-REEL(72)	10-12	72mm	16mm	34.25mm	52.90mm	380	3

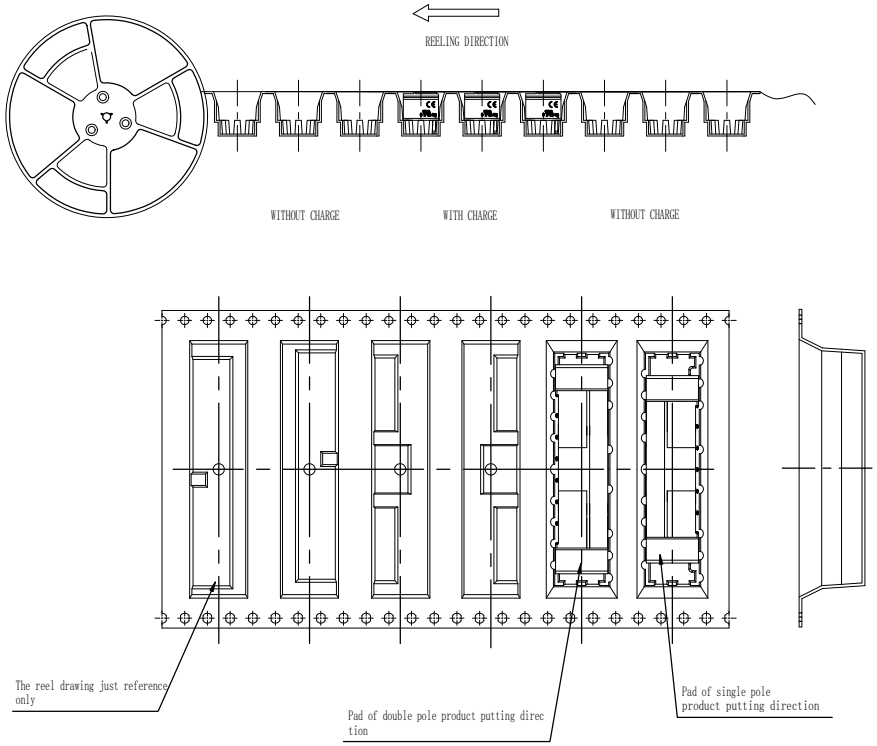

未注公差/General tolerances(mm)															
0 - 3	>3 - 6	>6 - 10	>10 - 18	>18 - 30	>30 - 50	>50 - 80	>80 - 120	>120 - 180	>180 - 250	>250 - 315	>315 - 400	>400 - 500	>500	0.1/10	
±0.12	±0.18	±0.22	±0.26	±0.31	±0.37	±0.57	±0.80	±0.93	±1.05	±1.15	±1.60	±2.20	±2.50	±2	

PCB LAYOUT

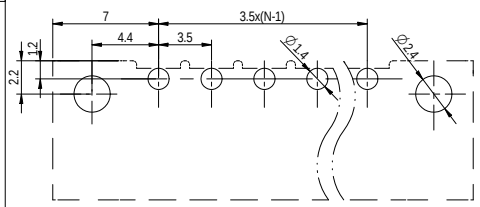

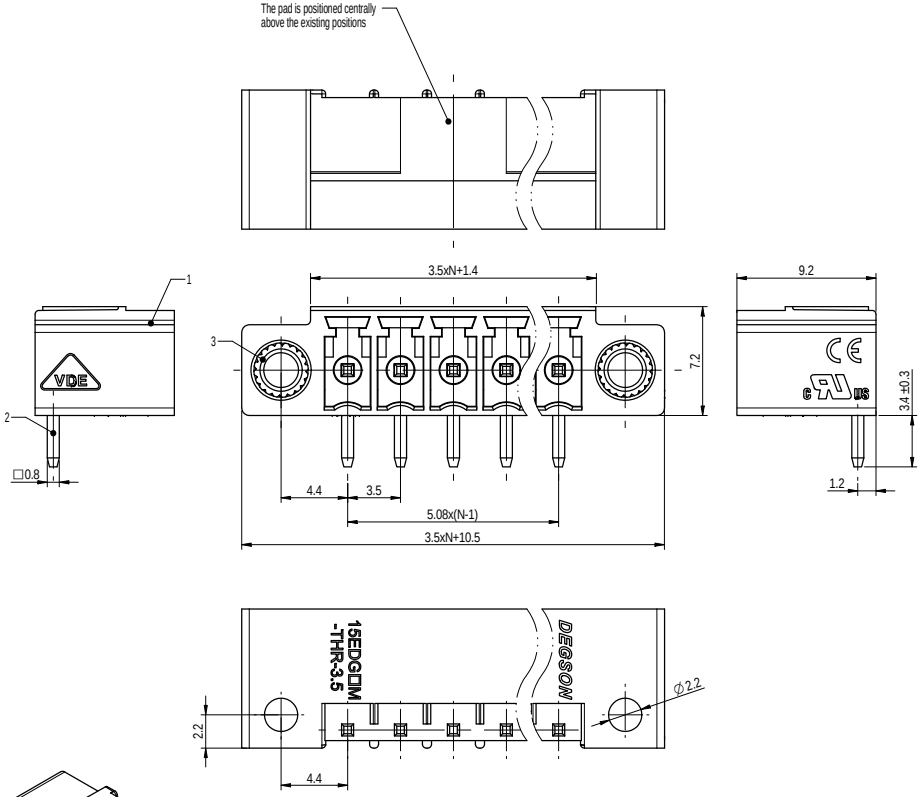

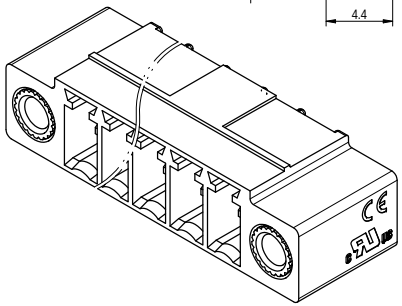

Note:
The A&Z(H) in the name means: A(H) and Z(H).

ITEM	NAME OF PART	MATERIAL	NOTES
3	Nut	Copper alloy	/
2	Pin	Copper	Sn Plated
1	Housing	Thermoplastic	UL94V-0

UL 标准/UL Standard:	B	C	D
额定电压/电流/Rated Voltage(V)/Current(A)	300/8	/	/
IEC 标准/IEC Standard:			
过压类别/Overvoltage Category/污染等级/Pollution Degree	III/3	III/2	II/2
额定电压/电流/Rated Voltage(V)/Current(A)	/	/	250/8
额定脉冲电压(KV)/Rate Impulse Voltage(KV)	/	/	2.5
间距/Pitch(mm)/线数范围/Poles	3.5/N=02-12P		
使用温度范围/Operating temperature(℃)	-40~+130		
符合RoHS环保要求/Conform to RoHS	Yes		

DEGSON	MATERIAL:	SURFACE/COLOR:	
	MAT NO./REV: -/00	MAT STATUS: 批量	
APPD: 兰春华	2022.11.11	NAME: 15EDGRM-THR-3.5-XXP-1Y-00A&Z(H)	
CHKD: 姜耀元	2022.11.10		
DRFT: 周锦锋	2022.11.10	DRAWING NO. 200021188	TYPE CUSTOMER DRAWING
A2	(inch)	DRAWING STATUS 已发布	SCALE 4:1
			SHEET 1/1

REV	ECN	DESCRIPTION	DRFT	DATE
00			周锦锋	2022.11.10

Inside or duplicate of this document or part of the distribution or communication of its contents are prohibited unless explicitly granted. Violation will be liable for damages. All rights reserved for patent, utility model or design patent registration.
禁止内容的复制或传播。违反者将赔偿损失。保留所有专利、实用新型或外观设计专利注册的权利。