Transfer or duplication of this document as well as the utilization or communication of its contents are prohibited unless explicit authorization is granted. Violations will be liable for compensation. All rights reserved for patent, utility model or designs registrations. 非给予有偿授权，否则禁止转让、复制、利用、交流本文件的内容，侵犯者将负赔偿责任。本公司保留对涉及发明、实用新型和外观专利的所有权利。

| Dimensional tolerance(mm) | | | | | Length tolerance(mm) | | | | |
|---|---|---|---|---|---|---|---|---|---|
| 0 ~ 30 | >30 ~ 60 | >60 ~ 100 | >100 ~ 150 | >150 | 0 ~ 5000 | 5000 ~ 10000 | 10000 ~ 30000 | >30000 | 0.10/10 |
| ±0.25 | ±0.35 | ±0.55 | ±0.80 | ±1.10 | ±55 | ±105 | ±205 | ±505 | ±2° |

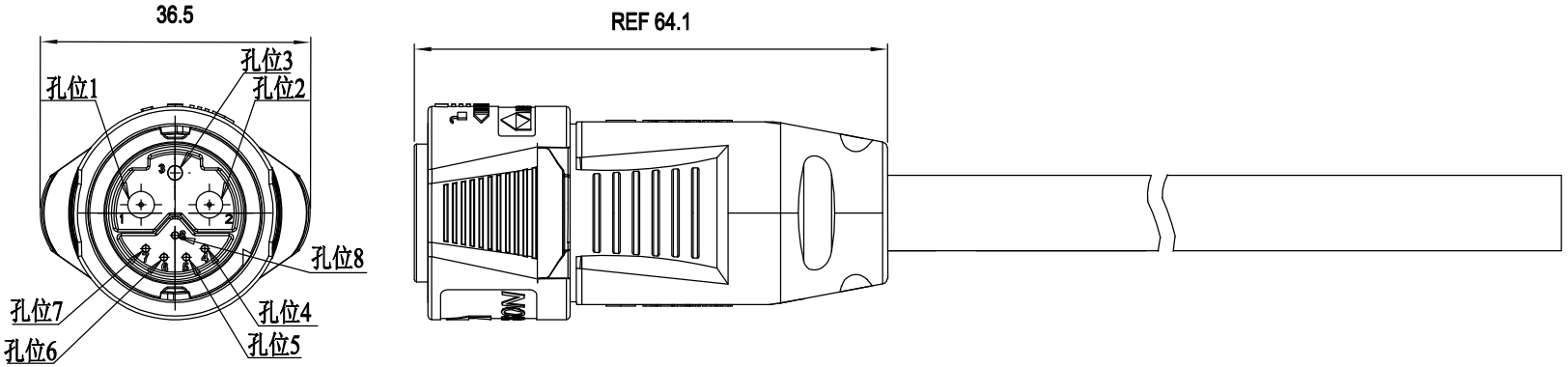


| 技术要求/Technical requirements: | |
|---|---|
| 额定电压电流/Rated Voltage/Current | 110V /30A(max) |
| 绝缘电阻/Insulate Resistance | ≥100MΩ |
| 耐压/Withstanding Voltage | 500V AC |
| 防护等级/Ingress Protection | IP67 |
| 插拔寿命/Insertion/Pullout Times | 3,000 Times |
| 使用温度范围/Operating temperature(°C) | -40℃~+105℃ |
| 接线方式/Terminal | Soldering |
| 导线外径范围/Wire range(mm) | Ø11±0.3 |

DEGSON

| | | | |
|---|---|---|---|
| MATERIAL: 材质 | | SURFACE: 表面处理 | |
| MAT NO./REV: 物料编码 | / 版本 | MAT STATUS: 物料状态 | |
| NAME | EBBL直插头 | | |
| APPD: | | | |
| CHKD: | | | |
| DRFT: | | | |

| 图纸版本 | ECN | 变更描述 | 设计人 | 设计日期 | A4 | mm (inch) | DRAWING NO. | TYPE | DRAWING STATUS | SCALE | SHEET |
|---|---|---|---|---|---|---|---|---|---|---|---|
| REV | ECN | DESCRIPTION | DRFT | DATE | | | 图号 | 图纸类型 | 图纸状态 | 1:1 | 1/ 1 |