FOR-1754 Rev.1.1

未注公差/General tolerances(mm)														
0 ~ 3	>3 ~ 6	>6 ~ 10	>10 ~ 18	>18 ~ 30	>30 ~ 50	>50 ~ 80	>80 ~ 120	>120 ~ 180	>180 ~ 250	>250 ~ 315	>315 ~ 400	>400 ~ 500	>500	0.1/10
±0.12	±0.18	±0.22	±0.26	±0.31	±0.37	±0.57	±0.80	±0.93	±1.05	±1.15	±1.60	±2.20	±2.50	±2°

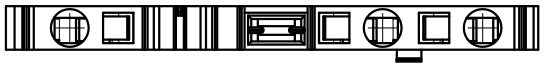

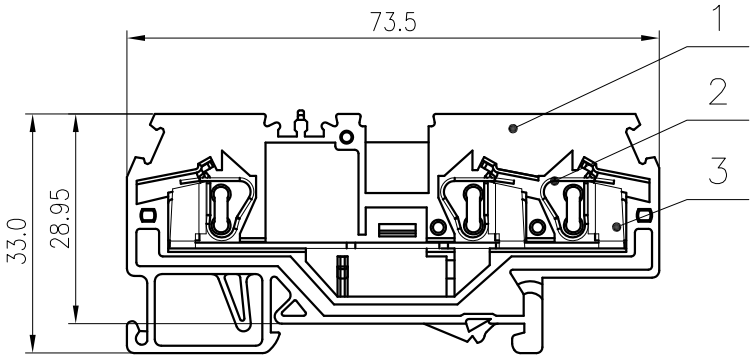

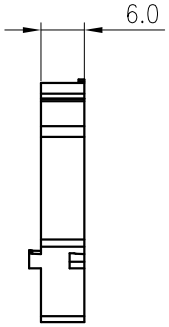

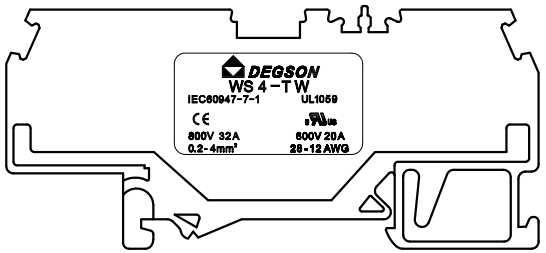

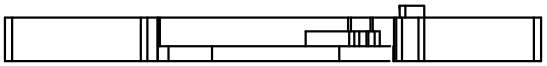

ITEM	NAME OF PART	MATERIAL	NOTES
3	Current carrier	Copper	Sn Plated
2	Spring	Stainless steel	
1	Housing	PA66	UL94V-0

UL 标准/UL Standard:	B	C	D
额定电压/电流/Rated Voltage(V)/Current(A)	600/20	600/20	600/5
EC 标准/IEC Standard:			
过压类别/Overvoltage Category/污染等级/Pollution Degree	III/3	/	/
额定电压/电流/Rated Voltage(V)/Current(A)	800/32	/	/
额定脉冲电压(KV)/Rate Impulse Voltage(KV)	8.0	/	/
线径范围(硬线和软线)/Wire Range(rigid and flexible)(mm²/AWG)	0.2~4.0/28~12(Sol)		
间距/Pitch(mm)	6.0		
剥线长度/Stripping length(mm)	10-12		
使用温度范围/Operating temperature(°C)	-40~+105		
符合RoHS环保要求/Conform to RoHS	Yes		
标准颜色编号/Standard color number: PANTONE / RAL	/		

MATERIAL: /		SURFACE: /	
MAT NO.: /	DEGSON®	宁波高松电子有限公司 NINGBO DEGSON ELECTRICAL CO., LTD	
STATUS: /			
APPD: Li GL 2020.04.04	NAME:	WS4-TW-01P-1Y-00A(H)	
CHKD: Mao J 2020.04.04			
DRFT: Wang LX 2020.04.04	DRAWING NO.: WS4-TW-C01	REV	T3
SIZE: A4 mm (inch)	TYPE: CUSTOMER DRAWING	SCALE: 1:1	SHEET 1/1

REV	ECN	DESCRIPTION	DRFT	DATE